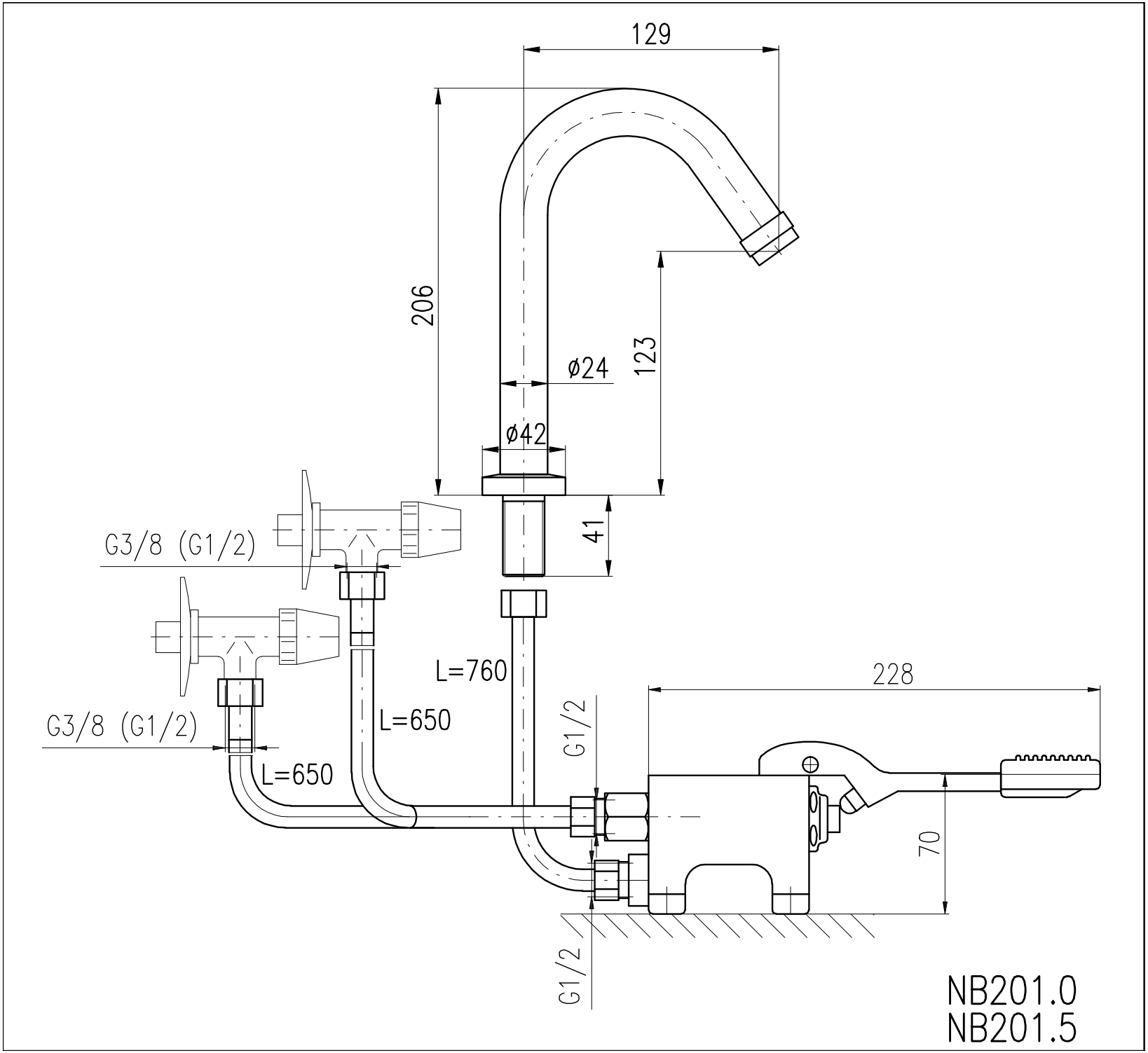
129
206
123
ø24
ø42
41
G3/8 (G1/2)
G3/8 (G1/2)
L=760
L=650
L=650
228
G1/2
G1/2
70
NB201.0
NB201.5