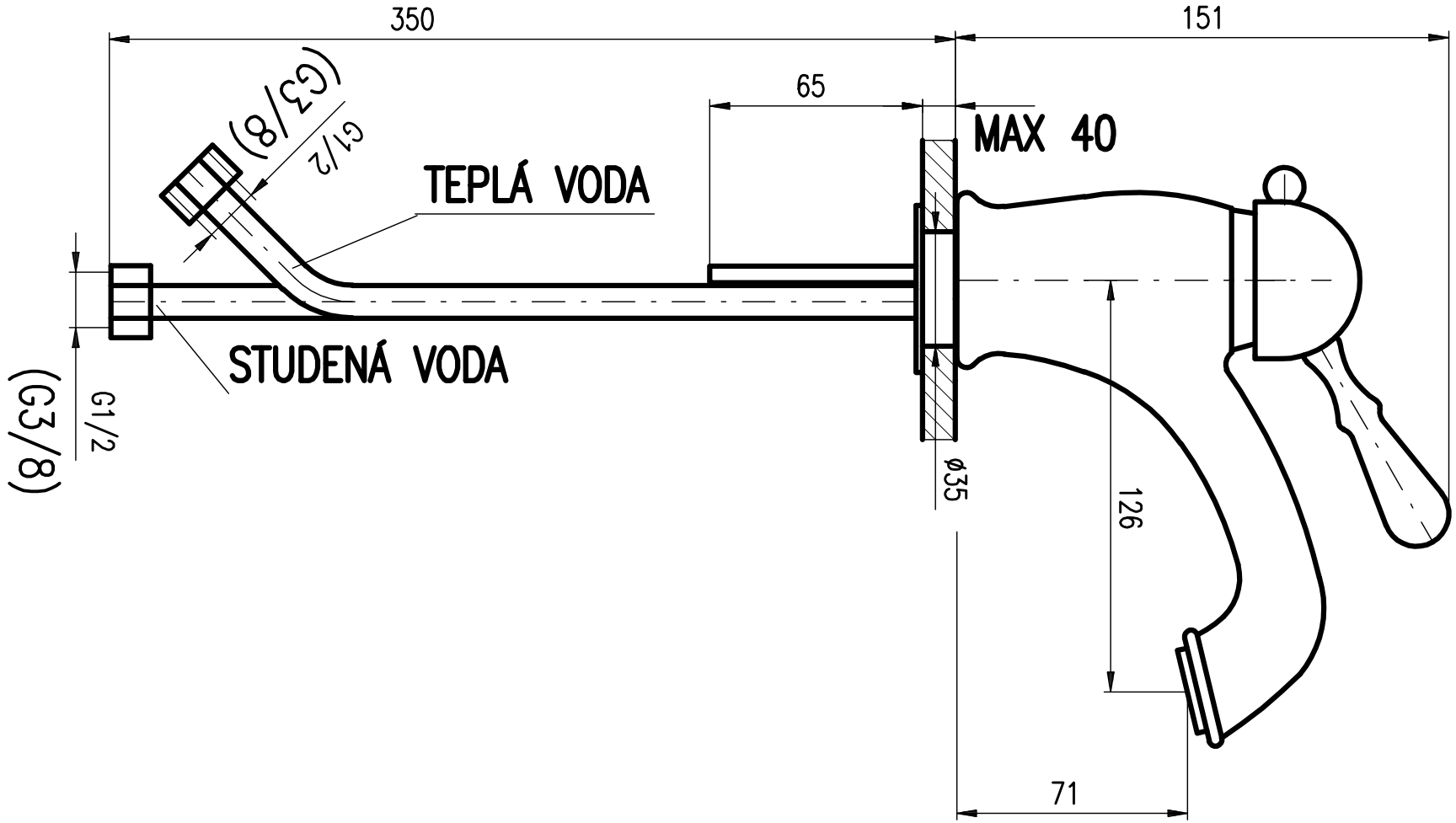
350
151
65
MAX 40
TEPLÁ VODA
STUDENÁ VODA
(G3/8)
G1/2
(G3/8)
G1/2
ø35
126
71